MESURA®

RESITE gas

# Regulators Series S21-S22

## SPRING LOADED PRESSURE REGULATORS

A Cavagna Group Company

Resite Sl
C/Navales, 51
28923 Alcor cón Madrid
916 418 495
info@resite.es

REV 1 - 1/2018

## 1 DESCRIPTION

The **S21** and **S22** regulators are a new line of pressure regulators – direct operating type – designed to guarantee a high regulation accuracy and a utmost easiness in use. These devices are usually used in distribution and industrial systems and are designed to be installed in regulation units in gas grids of natural, manufactured and lpg gas or other non corrosive gases, filtered at first. The **S21** and **S22** pressure regulators are "fail to open" type, which means that in case of malfunction due to breakng of th e main diaphragm or as a result of a lack of impulse downstream, the regulator will open up completely. The **S21** and **S22** pressure regulators are "top entry" type, which allows for maintenance operations without having to remove the body from the pipes. Modularity allows for variation in its configuration even when already installed in stream. In addition, the modules can be easily disassembled for eventual controls.

## 2 VERSIONS AVAILABLE

**.BP**

for an inlet pressure range of 0,5 ÷ 5 bar
for an outlet pressure range of 10 ÷ 150 mbar

**.MP**

for an inlet pressure range of 0,5 ÷ 5 bar
for an outlet pressure range of 10 ÷ 500 mbar

**.AP**

for an inlet pressure range of 0,5 ÷ 5 bar
for an outlet pressure range of 500 ÷ 4000 mbar

**.APA**

for an inlet pressure range of 2 ÷ 19 bar
for an outlet pressure range of 500 ÷ 4000 mbar

**.APS (not counterbalanced)**

for an inlet pressure range of 2 ÷ 19 bar
for an outlet pressure range of 500 ÷ 4000 mbar

## 3 MATERIALS

- Body in cast iron (GJS-400-18LT) or steel (ASTM A352 LF2 - only S22)
- Covers in aluminium die-cast (S21. S22)
- Diaphragms in rubber with cloth enforcement
- Seats in stainless steel
- Springs in stainless steel
- Available with internal pressure pulse only

## 4 FEATURES

- Counterbalanced regulating device
- Anti-pumping device
- Diaphragm shock adsorber or relief valve
- Top entry construction
- In accordance to 2014/68/UE - EN334
- Working Temperature: -20 (-30) ÷ 60
- Regulating Class: up to 5
- Closing Pressure Class: up to 10

## 5 TECHNICAL DATA

**Available versions:**
- **B: with OPSO/UPSO shut-off valve**
- **M: working as monitor**

| | Inlet Pressure | | | Outlet Pressure | | | | CG (valve coefficient) | Connections |
|---|---|---|---|---|---|---|---|---|---|
| | BP, MP, AP | APS | APA | BP | MP | AP, APS | AP, APA | | |
| | bar | | | mbar | | | | | |
| **S21- 1** | 5 or 6 | 19 | | 14 ÷ 150 | 150 ÷ 500 | 500 ÷ 4000 | | 160 | 1" x 1" |
| **S21- 2** | 5 or 6 | | 19 | | | | 500 ÷ 4000 | 281 | 1"x1"1/2 |
| **S21- 3** | 5 or 6 | | 19 | | | | 500 ÷ 4000 | 410 | 1"x1"1/2 |
| **S22- 1** | 5 or 6 | | 19 | 14 ÷ 150 | 150 ÷ 500 | | 500 ÷ 4000 | 574 | DN40 |
| **S22- 2** | 5 or 6 | | 19 | | | | 500 ÷ 4000 | 1160 | DN50 |

## 5.1 DIMENSIONING

The choice of the regulator is made using the **Cg** valve coefficient.
**Cg** coefficient is numerically equivalent to the value of air flow in Scfh in critical conditions with full open regulator operating with an upstream pressure of 1 psia and a temperature of 15° C.
Flow rates with maximum operating at different operating conditions can be calculated as follows:

a. in non critical conditions (when Pe < 2 Pa)

$$Q = 0,526 * Cg * Pe * \sin\left(93,5 * \sqrt{\frac{(Pe - Pa)}{Pe}}\right)^{Deg}$$

b. in critical conditions (when Pe ≥ 2 Pa)
where:

$$Q = 0,526 * Cg * Pe$$

Q=capacity [Stm3/h]
Pe= absolute upstream pressure [bar]
Pa= absolute downstream pressure [bar]

# 6 OPERATING PRINCIPLE

The operating principle for the **S21** and **S22** regulators is the same as for all models, with the exception of certain marginal
differences, exemplified below.
The **S21** and **S22** pressure regulator is a direct action type instrument with pressure control downstream through external impulse **(A)**.
The downstream pressure is controlled by comparing the spring load **(B)** and the thrust deriving from the downstream pressure on the diaphragm **(C)**. The diaphragm's movement is transmitted by the lever system **(D)** to the rod **(E)** and stopper **(F)**. The rubber pad **(G)** is vulcanized on the stopper and assures hermetic closing when the required capacity is nil.
If during operation the thrust deriving from the downstream pressure is less than the spring load **(B)**, the diaphragm **(C)** lower itself, and draws the stopper **(F)** away from the valve housing **(H)** until the downstream pressure once again attains the pre-set calibration value.

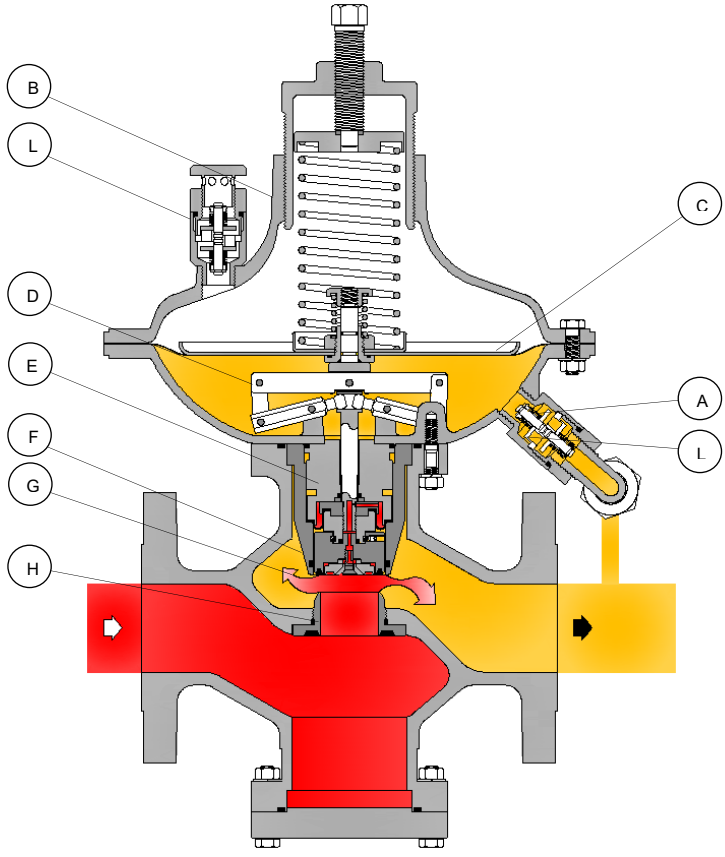

## 7.1 OVERALL DIMENSIONS

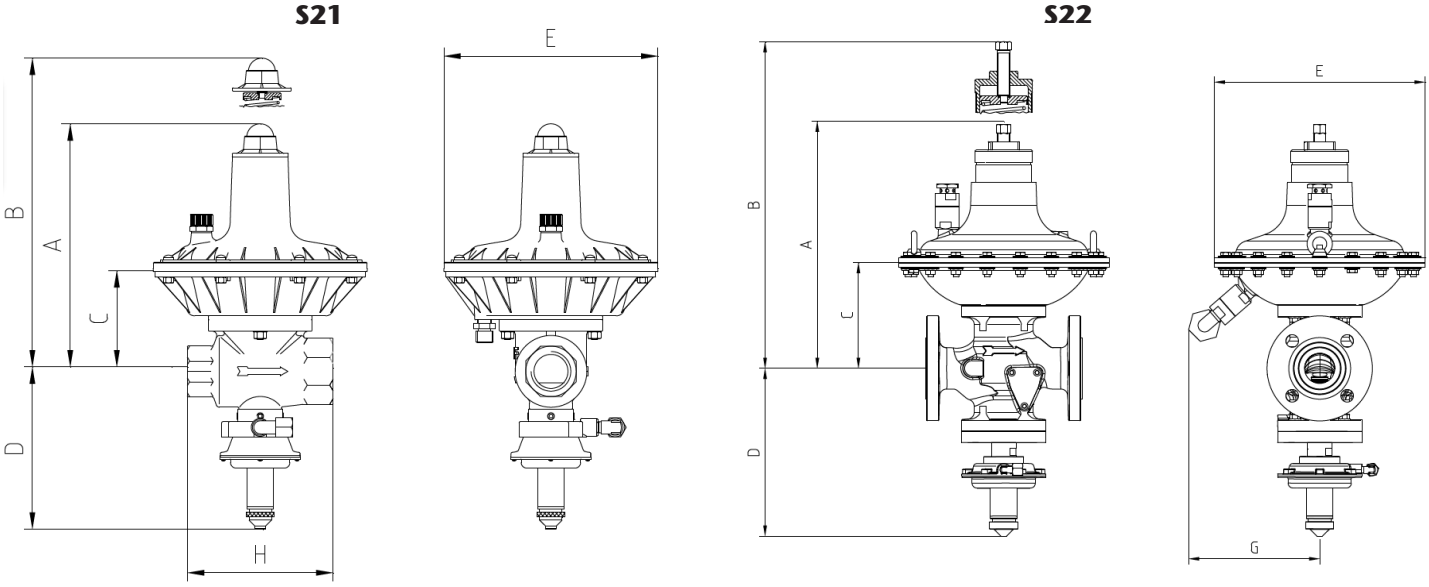


| | H | | | | A | B | C | D | G | E | | |
|---|---|---|---|---|---|---|---|---|---|---|---|---|
| | 1″ x 1″ | 1″ x 1″ 1/2 | DN 40 | DN 50 | | | | | | version | | |
| | mm | | | | | | | | | mm | | |
| **S21-1 B** | 100 | | | | 220 | 3856 | 90 | 135 | = | **189** | **189** | **189 TR** |
| | | | | | | | | | | BP | MP | AP - APS |
| **S21-2 B** | | 130 | | | 220 | 3856 | 90 | 135 | = | **189** | **189** | **189 TR** |
| | | | | | | | | | | BP | MP | AP - APA |
| **S21-3 B** | | 130 | | | 220 | 450 | 120 | 160 | = | **300** | **300** | **X** |
| | | | | | | | | | | BP | MP | X |
| **S22-1 B** | | | 223 | | 400 | 450 | 151 | 240 | 175 | **300** | **300** | **300 TR** |
| | | | | | | | | | | BP | MP | AP - APA |
| **S22-2 B** | | | 223 | 254 | 400 | 460 | 165 | 250 | 175 | **300** | **300** | **300 TR** |
| | | | | | | | | | | BP | MP | AP - APA |

## 7.2 INSTALLATION S21 - S22